Mini Contactors

Accessories

Interlock Kit

Reversing Mini Contactor

Separate parts for assembling Reversing Contactors

For Pre-assembled Reversing Mini Contactors please consult Altech.

Interlock Kit

Part No.	Mini Contactor Type
AR-12M	6A - 12A

Auxiliary Contacts

Part No.	Poles	Configuration	Mounting
AU-1M-10	1	1NO	Side
AU-1M-01	1	1NC	Side
AU-2M-20	2	2NO	Front
AU-2M-02	2	2NC	Front
AU-2M-11	2	1NO/1NC	Front
AU-4M-40	4	4NO	Front
AU-4M-31	4	3NO/1NC	Front
AU-4M-22	4	2NO/2NC	Front
AU-4M-13	4	1NO/3NC	Front
AU-4M-04	4	4NC	Front

Surge Units

Part No.	Rated Voltage	Internal Element	Contactor Type
AS-12M/1	24-48VAC	Varistor	GMC-6M-12M
AS-12M/2	60-127VAC	Varistor	GMC-6M-12M
AS-12M/3	200-240VAC	Varistor	GMC-6M-12M
AS-12M/4	12-24VDC	Varistor	GMD-6M-12M
AS-12M/5	30-72VDC	Varistor	GMD-6M-12M
AS-12M/6	100-127VDC	Varistor	GMD-6M-12M
AS-12M/7	200-250VDC	Varistor	GMD-6M-12M

Base for Separate Mounting Overload Relay

Part No.
AZ-12MH

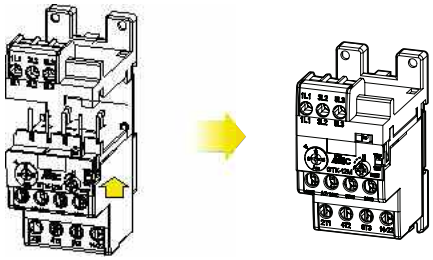

Specifications

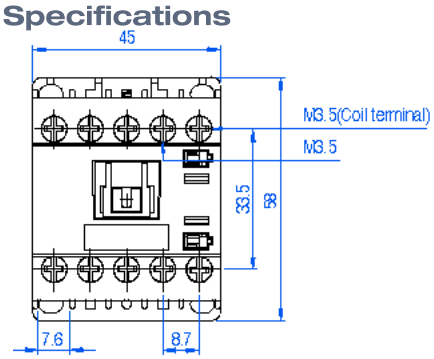

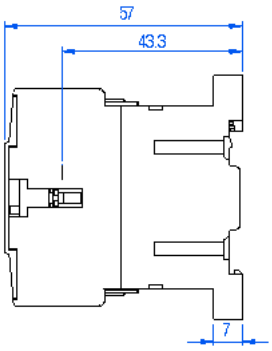

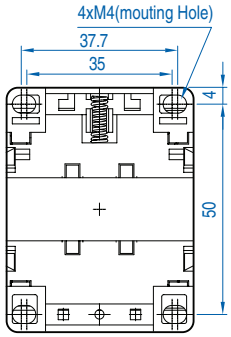

0.37 lb.

Dimensions in mm (to convert to inches multiply by 0.03937).